大阪公立大学
Osaka Metropolitan University
学術情報リポジトリ

Analysis of Light-Controlled Microstrip Filter

メタデータ	言語: English 出版者: 公開日: 2010-04-02 キーワード (Ja): キーワード (En): 作成者: Murata, Mitsutoshi, Kitamura, Toshiaki, Geshiro, Masahiro, Sawa, Shinnosuke メールアドレス: 所属:
URL	https://doi.org/10.24729/00008277

Bulletin of Osaka Prefecture University
Series A, Vol. 46, No. 1, 1997, pp. 7−10

Analysis of Light-Controlled Microstrip Filter

Mitsutoshi MURATA*, Toshiaki KITAMURA**, Masahiro GESHIRO** and Shinnosuke SAWA**

(Received June 30, 1997)

In this paper, we propose light-controlled microstrip filters whose frequency band can be changed by light illumination which induces plasma in a silicon chip buried in part of a substrate. We analyze the frequency characteristics of the filters by using the $(FD)^2$ TD method and investigate the characteristics affected by the photo-excited plasma.

1. Introduction

Recently, high-resistivity semiconductors have been expected to be used as substrate materials for microwave integrated circuits[1-4]. The illuminating of light whose photon energy is larger than the bandgap energy of the semiconductor induces electron-hole plasma in a light-illuminated area. The small region filled with photo-excited electron-hole plasma, as distinct from the surrounding region, has a complex permittivity and hence modulates microwaves propagating through[5-7]. Such optical control offers the following advantages: a) nearly perfect isolation, b) low static and dynamic insertion losses in some regimes, c) fast response, d) capability of high power handling and so on. In this study, we propose light-controlled microstrip filters whose frequency band can be changed by light illumination.

One of numerical schemes which have been successfully used to calculate the time-domain fields is the FDTD (Finite Difference Time Domain) method. It was first proposed by K.S.Yee and has been applied by many investigators to the solution of various electromagnetic problems. The FDTD method shows great promise in its flexibility in handling a wide variety of circuit configurations[8-12]. Broad-band pulses, if used as the initial condition for excitation, enable us to calculate the frequency-domain parameters over the entire frequency range of interest. Recently, the FDTD method has been extended to deal with dispersive materials like plasma, called the $(FD)^2TD$ (Frequency Dependent Finite Difference Time Domain) method.

In this paper, we analyze frequency characteristics of light-controlled microstrip filters by using the $(FD)^2$ TD method and investigate the effects of photo-excited plasma region on the frequency characteristics.

2. Analysis

The configuration of the light-controlled microstrip filter is shown in Fig.1. A thin rectangle of silicon chip 1.2mm long and 1.2mm wide is buried into the dielectric substrate on one end of the center microstrip conductor as shown in Fig.1 (model 1). Light beam illuminates the chip on the region L_1 [mm] × 1.2mm, inducing photo-excited plasma. In this analysis, the equipment of light beam emission isn't taken into consideration for the convenience of analysis. By changing the length L_1, frequency band of the filter is controlled. The parameters of the structure used in numerical calculations are as follows:

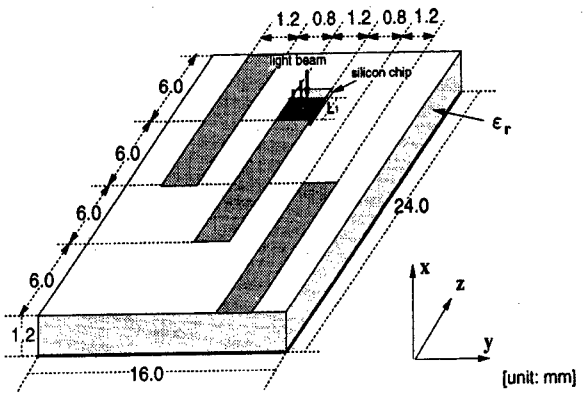

Fig.1 Configuration of the light-controlled microstrip filter (model 1)

*Graduate Student, Department of Electrical and Electronic Systems, College of Engineering.
**Department of Electrical and Electronic Systems, College of Engineering.

width of the microstrip conductor: 1.2mm,
thickness of the substrate: 1.2mm
dielectric constant of the substrate: $\varepsilon_r=4.4$,
length of the center microstrip conductors: 12mm,
space between microstrip conductors: 0.8mm.

The relative complex permittivity of the semiconductor is given by

$$\varepsilon_r = \varepsilon_s - \sum_{i=e,h}\left[\frac{\omega_{pi}^2}{\omega^2+\nu_i^2} + j\frac{\nu_i}{\omega}\frac{\omega_{pi}^2}{\omega^2+\nu_i^2}\right] \quad (1)$$

$$\omega_{pi} = \left[\frac{ne^2}{\varepsilon_0 m_i^*}\right]^{\frac{1}{2}} \qquad (i=e,h)$$

where ω is the angular frequency of the electromagnetic fields, e ($=1.60\times10^{-19}$kg) the elementary charge, ε_s($=11.8$) the permittivity of the semiconductor without plasma, m_e($=0.259\,m_0$) the effective mass of an electron, m_h ($=0.38m_0$) the effective mass of a hole, m_0 ($=9.11\times10^{-31}$ kg) the rest mass of an electron, ν_e ($=4.53\times10^{12}s^{-1}$) the collision angular frequency for electrons and ν_h ($=7.31\times10^{12}s^{-1}$) the collision angular frequency for holes.

In the analysis, we set up uniform grids with a difference $\Delta=0.100$ mm in space. Three dimensions of the whole structure are $40\Delta\times160\Delta\times240\Delta$. We excite the input port at $z=12\Delta$ with a Gaussian pulse in time. It is uniform on the transverse plane under the microstrip conductor and E_x is the only nonvanishing component of electric fields, expressed as

$$E_x(t) = -\frac{2(t-t_0)}{T^2}\,exp\left\{-\frac{(t-t_0)^2}{T^2}\right\} \quad (3)$$

where $t_0=200\Delta t$ and $T=60\Delta t$.

Scattering parameters S_{11} and S_{21} are given by

$$S_{11}(f) = \frac{V_{ref}(f,z_1)-V_{inc}(f,z_1)}{V_{inc}(f,z_1)} \quad (4)$$

and

$$S_{21}(f) = \frac{V_{trs}(f,z_2)}{V_{inc}(f,z_1)}, \quad (5)$$

respectively, where V_{ref} is the Fourier transform of the voltage of reflected waves at the input port, V_{inc} the Fourier transform of the voltage of incident waves at the same position, and V_{trs} the Fourier transform of the voltage of transmitted waves at the output port.

Figure 2 shows scattering parameters when $L_1=0.4$ mm and 1.2 mm in model 1. This result indicates that the center frequency of pass band is shifted from 5.92 GHz to 5.59 GHz by increasing the light-illuminated area from $0.4\times1.2\,mm^2$ ($L_1=0.4$ mm) to $1.2\times1.2mm^2$ ($L_1=1.2$mm). On the other hand, the insertion loss increases from 2.78 dB ($L_1=0.4$mm) to 3.68 dB ($L_1=1.2$ mm).

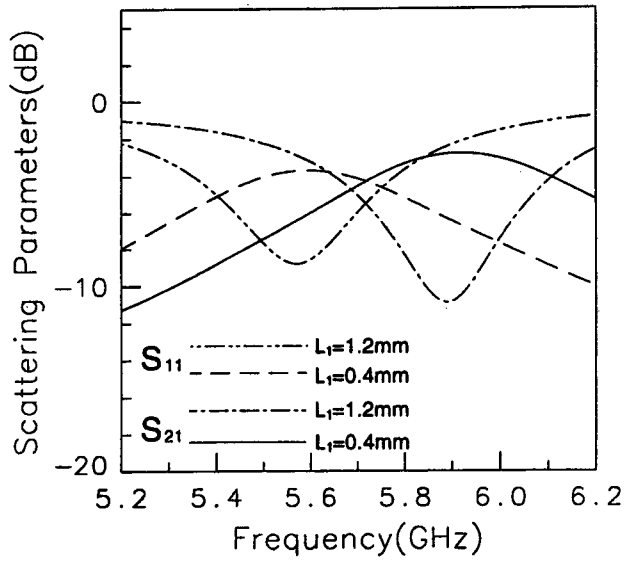

Fig.2 Scattering parameters (model 1)

Next, we consider another type of light-controlled filter to suppress insertion losses. Two silicon chips 0.6 mm long and 1.2mm wide are buried into the dielectric substrate on both ends of the center microstrip conductor as shown in Fig.3 (model 2). Light

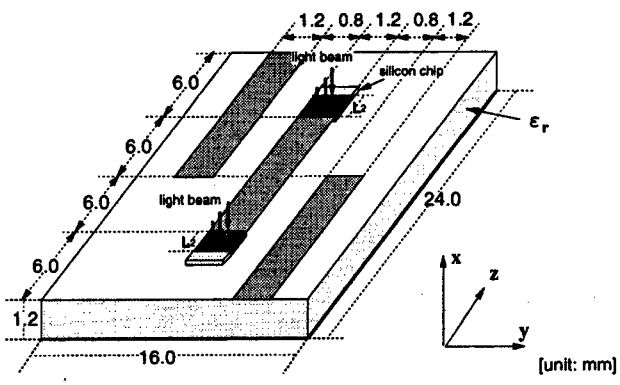

Fig.3 Configuration of the light-controlled microstrip filter (model 2)

beam illuminates the chips simultaneously on the region of L_2 [mm]×1.2mm.

Figure 4 shows scattering parameters when L_2 = 0.2 mm and 0.6mm in model 2. It is found that the center frequency of pass band is shifted from 5.81 GHz to 5.42GHz by increasing the light-illuminated area from $0.2 \times 1.2\text{mm}^2$ (L_2 = 0.2mm) to $0.6 \times 1.2\text{ mm}^2$ (L_2 = 0.6mm). Although the total area illuminated by light is quite the same as model 1, the insertion loss is 2.90 dB when L_2 = 0.2 mm and 3.55 dB when L_2 = 0.6mm: hence the insertion loss is suppressed for the filter with a wider light-illuminated region.

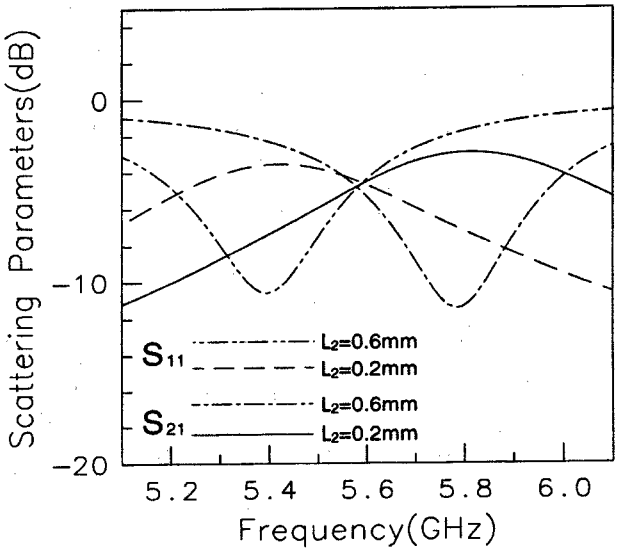

Fig.4 Scattering parameters (model 2)

Finally, we investigate the effect of the photo-excited plasma region to give a reasonable explanation. Figure 5 shows a microstrip open end followed by the plasma region of L_3 [mm]×1.2mm. We calculate the conductance of the plasma region seen at the end of microstrip. The conductance G(f) is determined in terms of $S_{11}(f)$ as follows:

$$G(f) = Re\left[Z_0(f) \cdot \frac{1 + S_{11}(f)}{1 - S_{11}(f)}\right] \tag{6}$$

In this equation, $Re[]$ means to take the real part of the factor in the brackets and Z_0 (f) is a characteristic impedance of the infinitely long microstrip.

Figure 6 shows the conductance $G(f)$ versus frequency for L_3 = 0.2mm with the solid line and for 0.4mm with the dashed line in (a) and for L_3 = 0.6mm with the solid line and for 1.2 mm with the dashed line in (b). We double the data shown with the solid lines, drawing the resultant values with the dash-dotted lines in both figures. Because of the symmetry in structure, the conductance of model 2 can be estimated by the dash-dotted line. As understood from the figure, the conductance of model 1 is evaluated to be smaller than model 2 when L_1 = 0.4mm in model 1 and L_2 = 0.2 mm in model 2, and vice versa when L_1 = 1.2 mm in model 1 and L_2 = 0.6 mm in model 2. These results

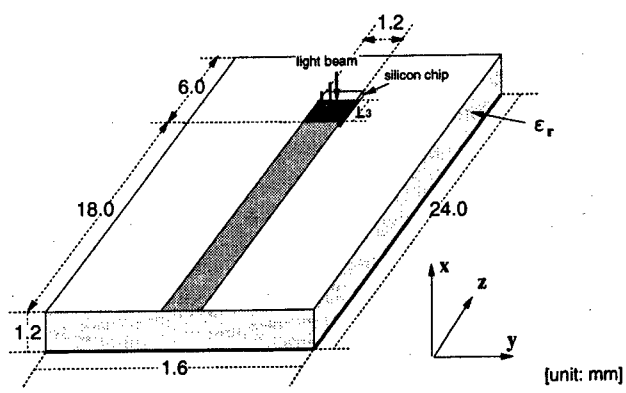

Fig.5 Configuration of the microstrip open-end which has the plasma region

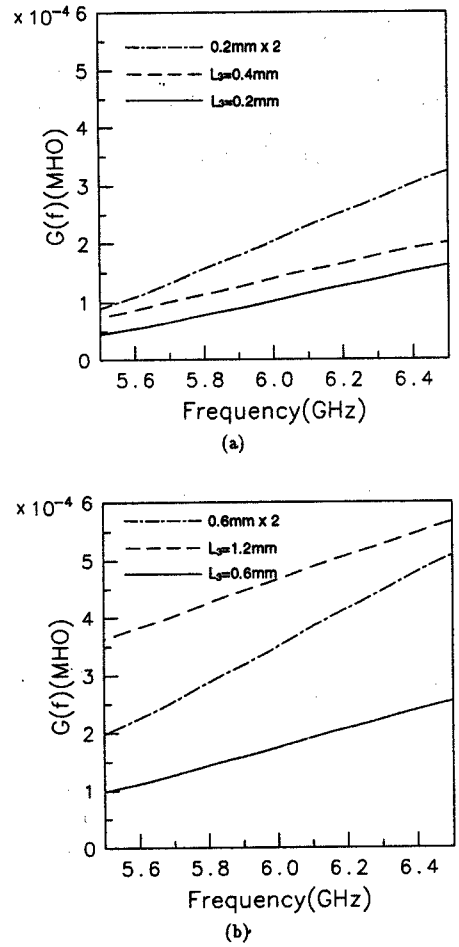

Fig.6 Frequency characteristics of conductance

suggest that the conductance is rather on the exponential increase as the length of light-illuminated region becomes longer.

3 Conclusion

In this paper,we have proposed light-controlled microstrip filters. We have analyzed the frequency characteristics by using the $(FD)^2TD$ method and demonstrated that the frequency band can be controlled by changing the light-illuminated area. We also have investigated insertion losses effected by the volume of photo-excited plasma.

References

1) K. Ogusu, I. Tanaka and H. Itoh: "Propagation Properties of Dielectric Waveguides with Optically Induces Plasma Layers", IEICE Trans., **J66-C**, 1, pp.39-46, (1983).
2) K. Ogusu and I. Tanaka: "Dielectric Waveguide-Type Millimeter-Wave Modulator Using Photoconductivity", IEICE Trans., **J67-B**, 4, pp.416-423, (1984).
3) K. Ogusu: "Strip Line-Type Microwave Modulator Using Photoconductivity", IEICE Trans., **J68-B**, 5, pp.578-585, (1985).
4) H. Shimazaki and M. Tsutsumi: "Light-Controlled Microstrip Line Coupler", IEICE Trans., **J72-C-I**, 4, pp.257-262, (1989).
5) A.M. Vaucher, C.D. Strffler and C.H. Lee: "Theory of Optically Controlled Millimeter Phase Shifters", IEEE Trans. Microwave Theory & Tech., **MTT-31**, 2, pp.209-216, (1983).
6) C.H. Lee, P.S. Mak and A.P. DeFonzo: "Optical Control of Millimeter-wave Propagation in Dielectric Waveguides", IEEE Quantum Electron., **QE-16**, 3, pp.277-288, (1980).
7) W. Platte: "Optoelectronic Microwave Switching via Laser-induced Plasma Tapers GaAs Microstrip Sections", IEEE Trans. Microwave Theory & Tech., **MTT-29**, 10, pp.1010-1018, (1981).
8) K.S. Yee: "Numerical Solution of Initial Boundary Value Problems involving Maxwell's Equations in Isotropic Media", IEEE Trans. Antennas & Propag., **AP-14**, 3, pp.302-307, (1966).
9) A. Taflove and M.E. Brodwin: "Numerical solution of steady-state electromagnetic scattering problems using the time-dependent Maxwell's equations", IEEE Trans. Microwave Theory & Tech., **MTT-23**, 8, pp.623-630, (1975).
10) X. Zhang and K.K. Mei: "Time-Domain Finite Difference Approach to the Calculation of the Frequency-Dependent Characteristics of Microstrip Discontinuities", IEEE Trans. Microwave Theory & Tech., **MTT-36**, 12, pp.1775-1787, (1988).
11) X. Zhang and K.K. Mei: "Calculations of the Dispersive Characteristics of Microstrips by the Time-Domain Finite Difference Method", IEEE Trans.Microwave Theory & Tech., **MTT-36**, 2, pp.263-267, (1990).
12) D.M. Sheen, S.M. Ali, M.D. Abouzhra and J. A. Kong: "Application of the Three-Dimensional Finite-Difference Time-Domain Method to the Analysis of Planer Microstrip Circuits", IEEE Trans. Microwave Theory & Tech., **38**, 7, pp.849-857, (1990).