大阪公立大学
Osaka Metropolitan University
学術情報リポジトリ

Unification of Pressure Systems in Deep Drawing Utilizing Lateral Fluid Pressure

メタデータ	言語: English 出版者: 公開日: 2010-04-06 キーワード (Ja): キーワード (En): 作成者: Asakura, Kenji, Kobayashi, Nobuo, Kozu, Masahide, Tanabe, Shigenori メールアドレス: 所属:
URL	https://doi.org/10.24729/00008505

Unification of Pressure Systems in Deep Drawing Utilizing Lateral Fluid Pressure

Kenji ASAKURA*, Nobuo KOBAYASHI*, Masahide KOHZU* and Shigenori TANABE*

(Received November 15, 1987)

The original equipment of the drawing utilizing lateral fluid pressure and the operation were simplified by unifying two pressure systems: punch pressure system and lateral pressure system. In the improved equipment, punch is forced down by punch rod which receives fluid pressure equal to lateral fluid pressure p_s. So, punch force F_p varies in proportion to p_s during the drawing process. The drawing characteristics in the improved equipment were given experimentally as p_s-S curves, where S is punch stroke. The curves were analyzed based on results in the original equipment, and it was confirmed that the improved equipment is regulated according to its theory. The improvement of equipment may make this drawing more practical.

1. Introduction

Authors[1~5] have already reported results of a series of studies on the deep drawing utilizing lateral fluid pressure. The drawing equipment has two pressure systems: punch pressure system, lateral fluid pressure system. The relation between those pressures during the drawing process was clarified experimentally for aluminum blank and was confirmed theoretically. In this deep drawing, remarkable reduction of punch load due to applying lateral fluid pressure enabled one to draw a blank with very high drawing ratio. However, the equipment and the operation were complicated because of having two pressure systems. This study was carried out to simplify the equipment and the operation by unifying the pressure systems.

2. Experimental Procedure

2.1 Experimental equipment

Figures 1 and 2 show diagram of the improved drawing equipment and the magnified diagram of its improved part, respectively. In this equipment, well-balanced forces are applied simultaneously to the punch and side face of a blank by only pressurizing an unified fluid pressure system.

As shown in these figures, the intermediate cylinder of this equipment differs from that of original one[1] in construction. In the original equipment, the intermediate cylinder separates the punch pressure system from the lateral pressure system, and the punch is operated directly by fluid pressure in the punch pressure system. In the improved equipment, the intermediate cylinder is pierced by the punch rod, and fluid pressure is sealed by the O-ring with backup ring that is fixed by the bushing on the

* Department of Metallurgical Engineering, College of Engineering.

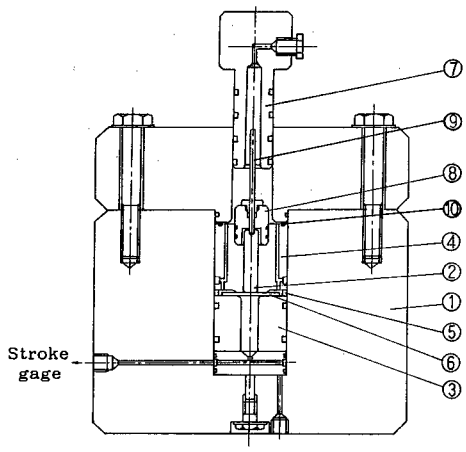

① Container ② Punch ③ Die ④ Hold-down cylinder
⑤ Stop ling ⑥ Blank ⑦ Plunger ⑧ Intermediate cylinder
⑨ Punch rod ⑩ Elastic ring

Fig. 1 Diagram of improved drawing equipment.

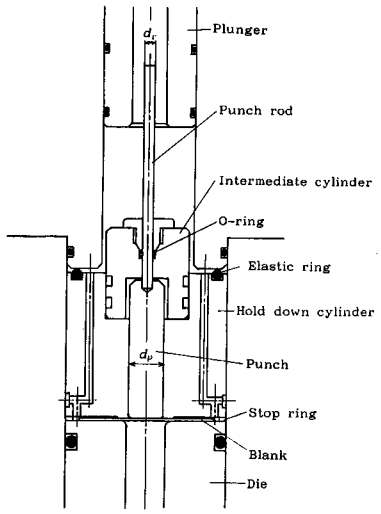

Fig. 2 Magnified diagram of improved part of drawing equipment.

intermediate cylinder. Therefore, the punch is operated indirectly by pressurizing the punch rod and the pressure is as same as lateral fluid pressure. Then, punch force F is given by $F = p_s \cdot \pi d_r^2/4$ (d_r: punch rod diameter), and varies in proportion to lateral fluid pressure p_s during the drawing process.

Though the punch dose not receive directly fluid pressure in this equipment, equivalent punch pressure p_p' is defined by the following equation as what corresponds to punch pressure p_p in the original equipment.

$$p_p' = p_s (d_r^2/d_p^2) . \tag{1}$$

2.2 Experimental condition

For the specimen, the soft aluminum sheet A1050P-O of 0.8 mm in thickness was used and its mechanical properties are shown in Table 1. The diameter of blank D_0 was 60 mm.

Table 2 shows main dimensions of tools. Punch diameter d_p was 15 mm, then drawing ratio D_0/d_p becomes 4. Diameter of punch rods d_r was determined based on the results of experiment with the original equipment[1)] in the range in which punch force will not cause fracture of a blank. Tools except the punch rod and intermediate cylinder were as same as those of the original equipment.

Let k be ratio of equivalent punch pressure p_p' to lateral fluid pressure p_s. Then,

$$k = p_p'/p_s = d_r^2/d_p^2 \ . \tag{2}$$

Hereafter, the ratio k will be referred to as pressure ratio. As seen from Eq. (2), the thicker punch rod d_r gives the larger pressure ratio k. Pressure ratios for three punch rods R-1, R-2 and R-3 were 0.071, 0.090 and 0.111, respectively.

Table 1 Mechanical properties of specimen.

Material	A1050P-O
Tensile strength σ_t/MPa	80
Elongation e_f/%	50
Strain hardening exponent n	0.28

Table 2 Main dimensions of tools

Punch		Diameter d_p/mm		Punch profile radius ρ_p/mm
		15.0		2.0
Punch rod		Diameter d_r/mm		
	R-1	4.0		
	R-2	4.5		
	R-3	5.0		
Die		Die throat diameter d_d/mm		Die profile radius ρ_d/mm
		16.9		2.5
Hold-down cylinder		Protrusion		
		Diameter d_h/mm	Height h/mm	Taper angle θ/°
		26	0.1	7
Stop ring		Thickness T/mm		
		0.85		

3. Results and Consideration

3.1 Curve of p_p-S obtained in original equipment

Figure 3 shows curves of punch pressure p_p – punch stroke S representing drawing characteristics in the original equipment. These p_p-S curves don't differ noticeably from those for the specimen used in previous paper[1]. From this figure, it is seen that the minimum lateral fluid pressure p_s required to draw a blank without fracture is 110 MPa and the maximum punch pressure $p_{p\max}$ for p_s = 110 MPa is 13.6 MPa. Then, p_p/p_s becomes 0.124.

Therefore, pressure ratio k ($= p_p'/p_s$) in the improved equipment must be under 0.124, and it is seen that diameter of punch rod d_r must be under 5.27 from Eq. (2). However, too thin punch rod is in danger of buckling. From the above, diameter of punch rod d_r was determined to be 4.0, 4.5 and 5.0 mm as shown in Table 2.

3.2 Curve of p_p-S obtained in improved equipment

Figure 4 shows curves of lateral fluid pressure p_s – punch stroke S representing

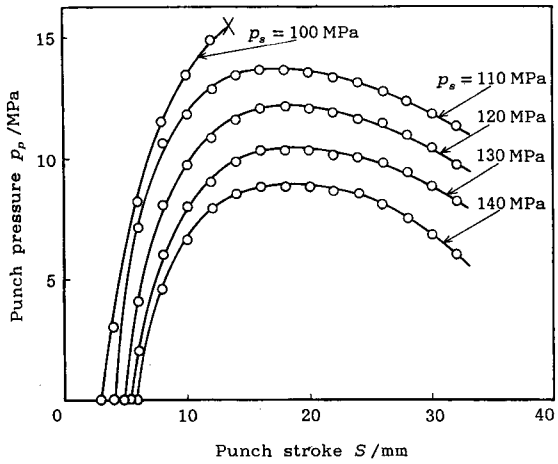

Fig. 3 p_p-S curves for different lateral fluid pressure p_s obtained in original equipment.

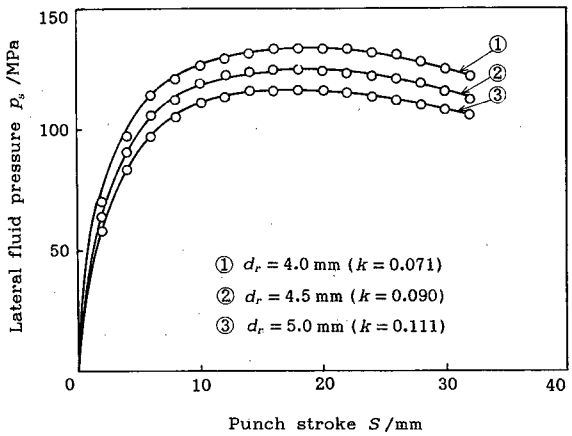

Fig. 4 p_s-S curves for different diameter of punch rod d_r obtained in improved equipment.

drawing characteristics in the improved equipment. These curves obtained for three different-diam punch rods are distinguished as curves ①, ② and ③. As shown in Fig. 4, the higher lateral fluid pressure is required for the thinner punch rod during the drawing process. In every curve, lateral fluid pressure p_s required to draw a blank increases rapidly at the beginning of drawing. Then, it increases slowly to a maximum and decreases gradually with increasing punch stroke S.

3.3 Curve of p_p'-S

Figure 5 shows curves of equivalent punch pressure p_p' – punch stroke S, which is obtained by transformation of p_s-S curves (Fig. 4) using Eq. (1). As shown in Fig. 5, when thinner punch rod is used, equivalent punch pressure p_p' becomes lower. On the other hand, p_p'-S curves may be estimate from p_p-S curves obtained in the original equipment as follows.

The diagram of p_p-S shown in Fig. 3 can be transformed into p_p-p_s diagram for different punch strokes S. Fig. 6 shows the p_p-p_s diagram for only S = 10, 20 and 30 mm. As shown in this figure, the point at which p_p/p_s is equal to a pressure ratio k (= p_p'/p_s; see Fig. 5) can be marked on the p_p-p_s curve for each punch stroke, and the value of

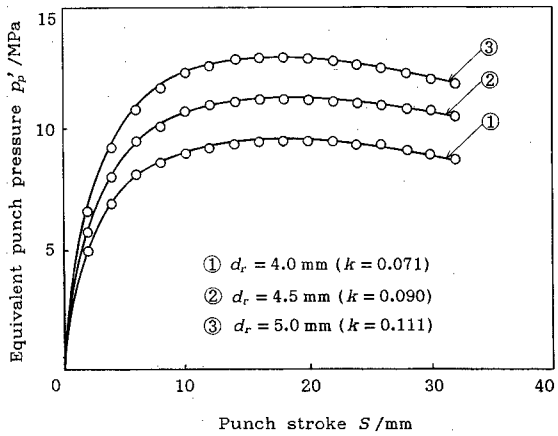

Fig. 5 p_p'-S curves obtained in improved equipment.

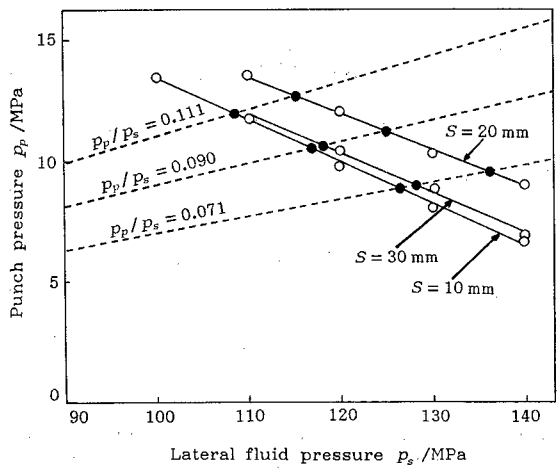

Fig. 6 p_p-p_s diagram transformed from p_p-S diagram.

punch pressure p_p at the point can be read. The values read from many p_p-p_s curves for different punch strokes were plotted on the p_p-S diagram, and the points obtained were connected. The broken lines in Fig. 7 show the curves obtained by such a manner and they correspond to p_p'-S curves estimated from p_p-S curves. The estimated p_p'-S curves (broken lines in Fig. 7) and the p_p'-S curves obtained in improved equipment (Fig. 5) are compared in Fig. 8. As a result, it is confirmed that the both (solid lines and broken lines) coincide well.

3.4 Drawing force F and its components F_s and F_p

In the improved equipment, lateral fluid pressure p_s and punch force F_p vary proportionally during the drawing process. However, degrees of their contributions to drawing deformation are not seen easily, and evaluation of magnitude of total force required to draw a blank is difficult, because the force is applied dually to different parts of a blank.

Authors have already defined the drawing force in the deep drawing utilizing lateral

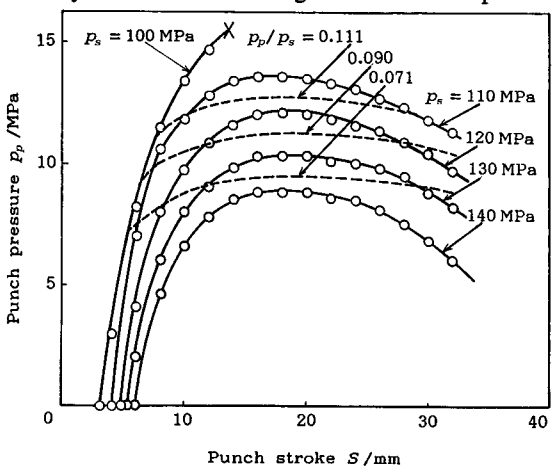

Fig. 7 p_p'-S curves estimated from p_p-S curves obtained in original equipment.

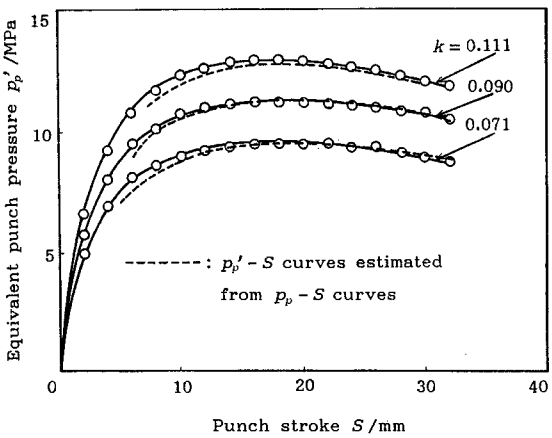

Fig. 8 Comparison of p_p'-S curves obtained in improved equipment with those estimated from p_p-S curves.

fluid pressure as the derivative of drawing work with respect to punch stroke[3~5]. By this definition, forces applied dually can be unified, and the drawing force F corresponds to the punch force in conventional drawing. Drawing force F in the improved equipment is given as a sum of punch force F_p and another component F_s caused by lateral fluid pressure p_s as shown by the following:

$$F = (\pi d_r^2/4)p_s + \pi d_i t p_s = F_p + F_s \,. \tag{3}$$

Where, d_i is the average of punch diameter d_p and die throat diameter d_d, and t is thickness of blank. Here, it is assumed that t is constant during the drawing process.

Figure 9 shows the variation of drawing force F and its component F_s caused by lateral fluid pressure during the drawing process in the improved equipment, which is obtained from Fig. 4 by using Eq. (3). As shown in Fig. 9, F-S curves for different diameter of punch rod almost coincide, which suggests that the force required to draw a blank dose not depend on pressure ratio k. For smaller diameter of punch rod d_r, degree of punch force F_p ($= F - F_s$) in drawing force F is smaller as a matter of course.

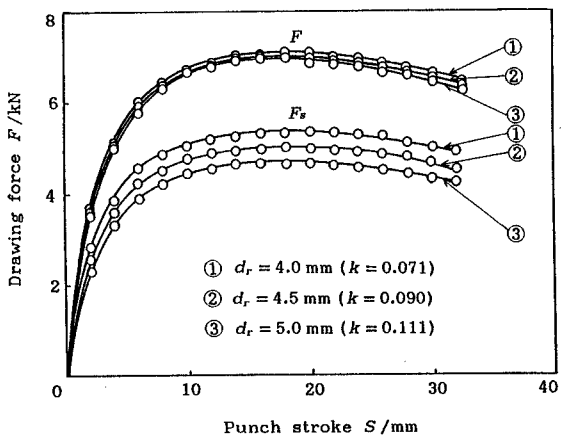

Fig. 9 F-S curves and F_s-S curves obtained in improved equipment.

4. Conclusion

Two pressure systems of the original equipment of the drawing utilizing lateral fluid pressure were unified to simplify the equipment and the operation. In the improved equipment, the punch is forced down by the punch rod which receives fluid pressure equal to lateral fluid pressure p_s. So, punch force F_p varies in proportion with p_s during the drawing process. The drawing characteristics in the improved equipment were given experimentally as p_s-S curves. The curves were analyzed based on results in the original equipment, and it was confirmed that the improved equipment is regulated according to its theory. The improvement of equipment may make this drawing more practical.

References

1) K. Asakura, N. Kobayashi, T. Hanamoto and M. Kohzu, Bull. Univ. Osaka Pref., **31A**, 171 (1982).

2) K. Asakura, N. Kobayashi, T. Hanamoto and M. Kohzu, J. Jap. Sci. Tech. Plasticity, **24**, 927 (1983).
3) K. Asakura, N. Kobayashi, T. Hanamoto and M. Kohzu, Bull. Univ. Osaka Pref., **32A**, 147 (1983).
4) K. Asakura, N. Kobayashi, M. Kohzu and N. Suzuki, J. Jap. Sci. Tech. Plasticity, **25**, 17 (1984).
5) K. Asakura, N. Kobayashi and M. Kohzu, Bull. Univ. Osaka Pref., **33A**, 65 (1984).